Assembly instructions
Notice de montage
Montage instructies
Montageanleitung
Istruzioni di montaggio
Instrucciones de montaje
Инструкция по сборке
Instrukcje montażu

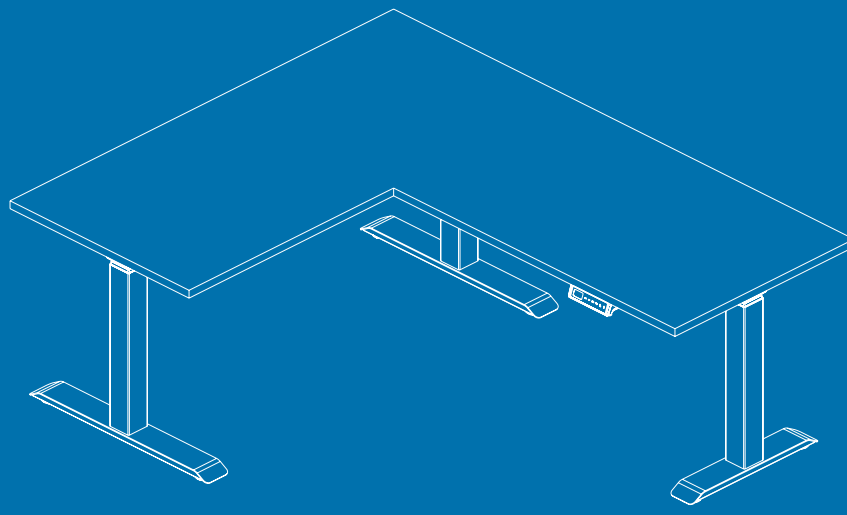

PARTS AND TOOLS LIST

NO	Name	Qty
1	Support Beam2	1
2	Foot Pad	6
3	Foot Margin	3
4	M8*16 Screw	12
5	Bracket	3
6	Legs	3
7	Support Beam1	1
8	M6*10 Screw	8
9	4mm Hex Spanner	1
10	5mm Hex Spanner	1
11	M6*12 Screw	18
12	M6*16 Screw	6
13	Rubber Cushion	16
14	ST3.5*19 Screw	7
15	ST4.8*19 Screw	16
16	M6*8 Screw	2
17	Cable Clip	5
18	Adaptor	1
19	Handset	1
20	Power Cable	1
21	100cm Extension cable	1

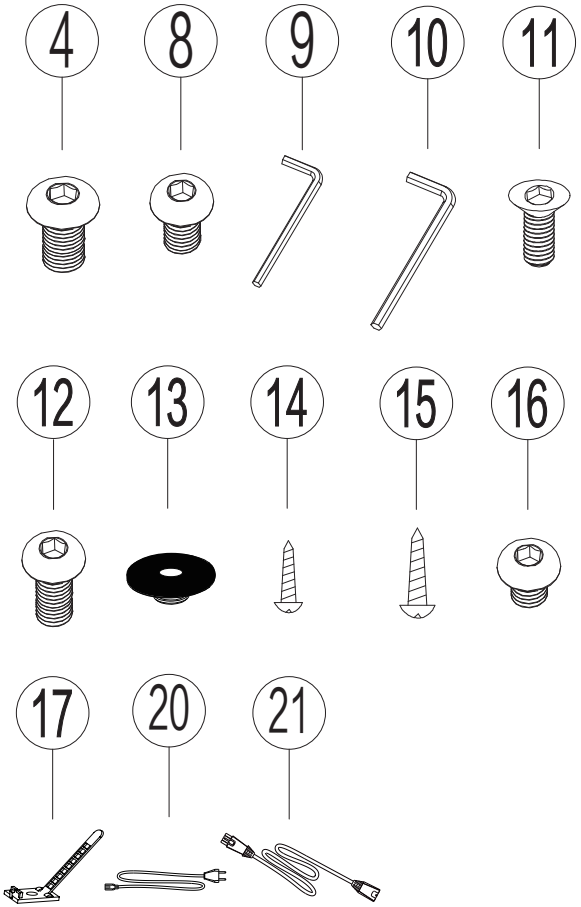

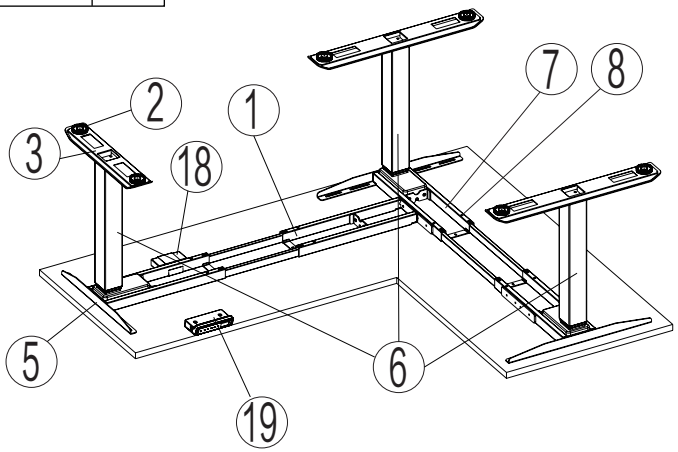

STEP 1

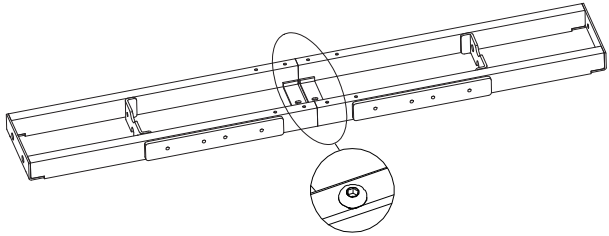

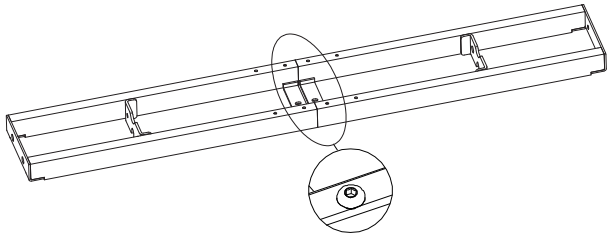

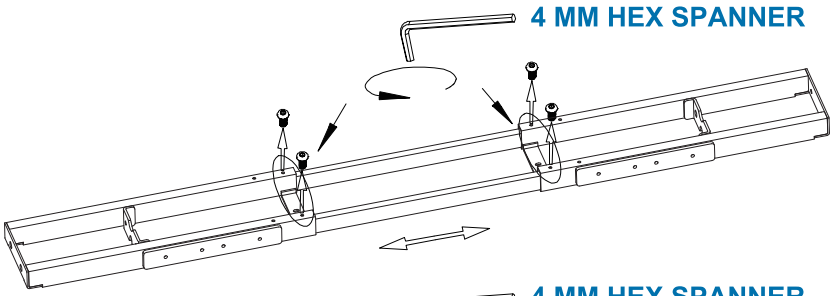

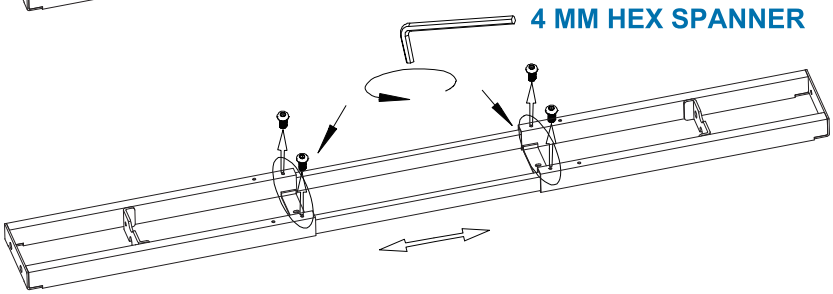

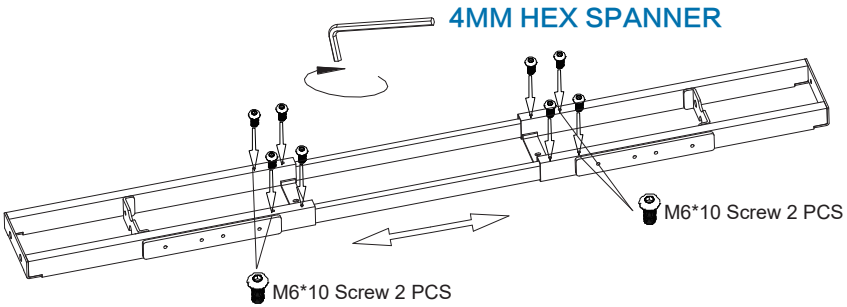
4MM HEX SPANNER
M6*10 Screw 2 PCS
M6*10 Screw 2 PCS

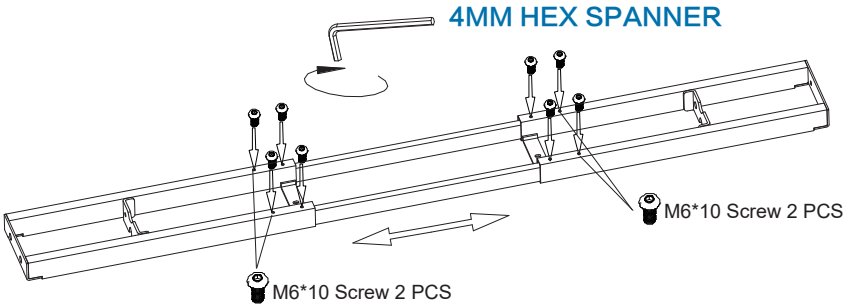
4MM HEX SPANNER
M6*10 Screw 2 PCS
M6*10 Screw 2 PCS

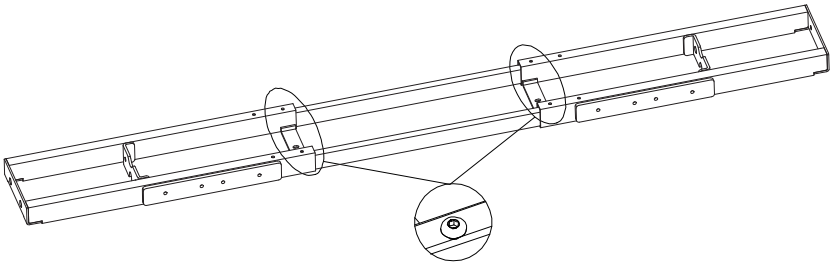

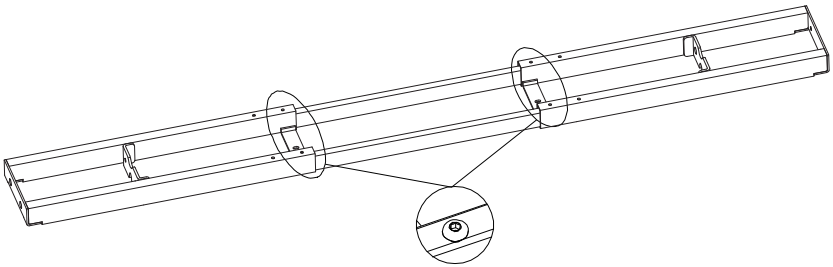

STEP 2

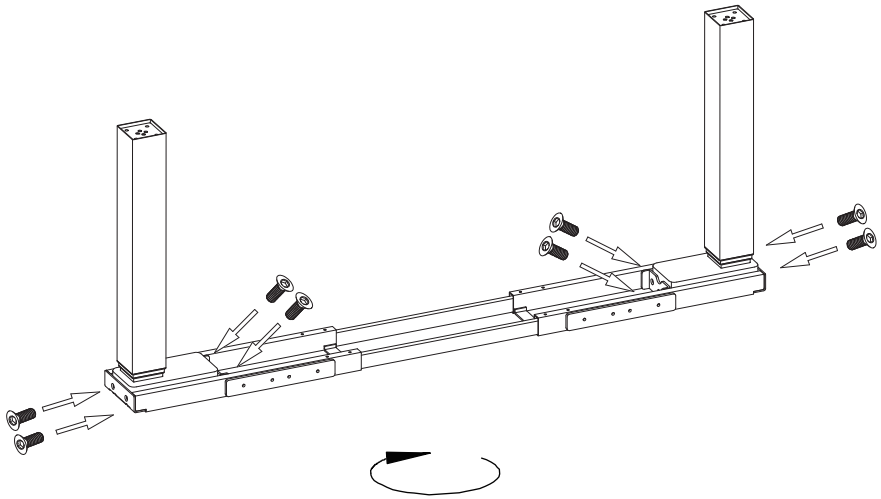

M6*12 SCREW 8PCS

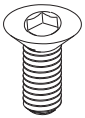

4MM HEX SPANNER

STEP 3

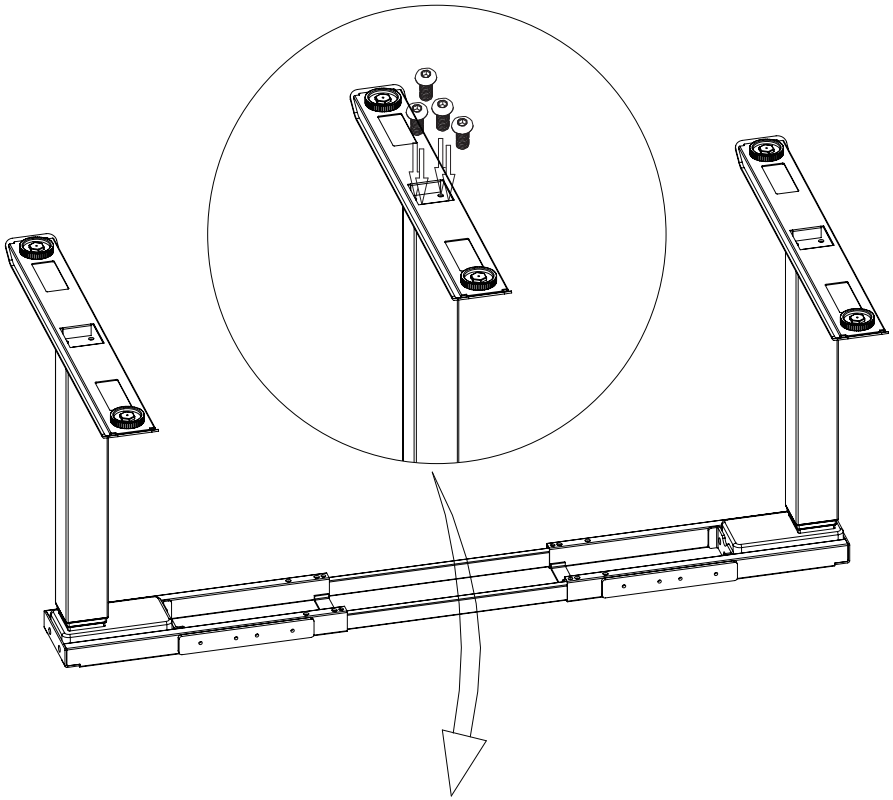

M8*16 SCREW 8PCS

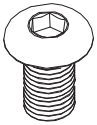

5MM HEX SPANNER

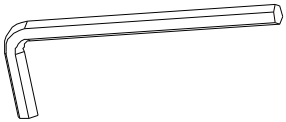

STEP 4

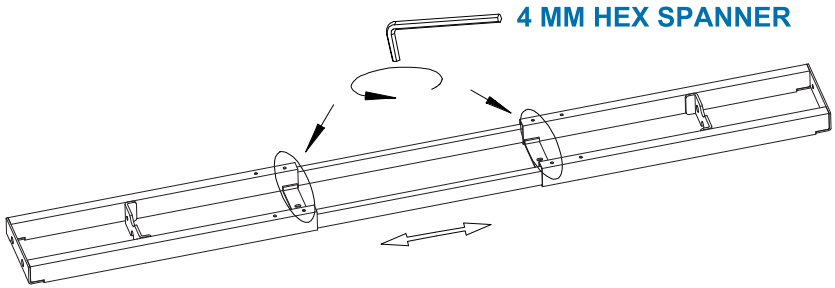

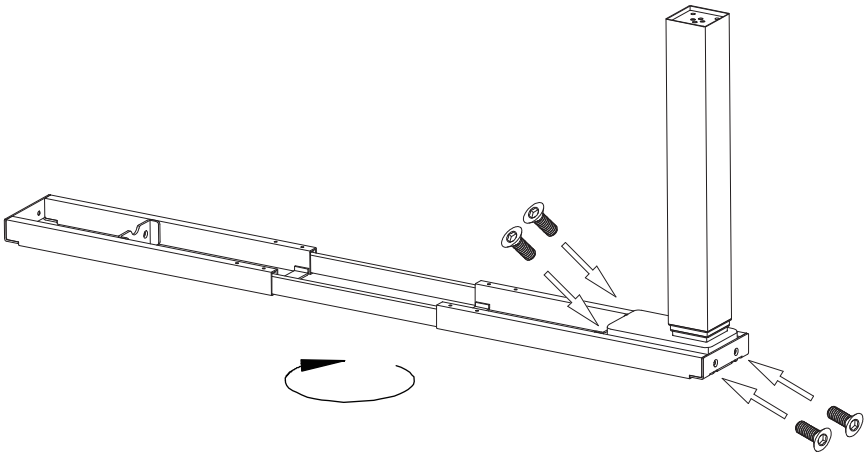

M6*12 SCREW 4PCS

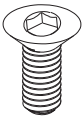

4MM HEX SPANNER

STEP 5

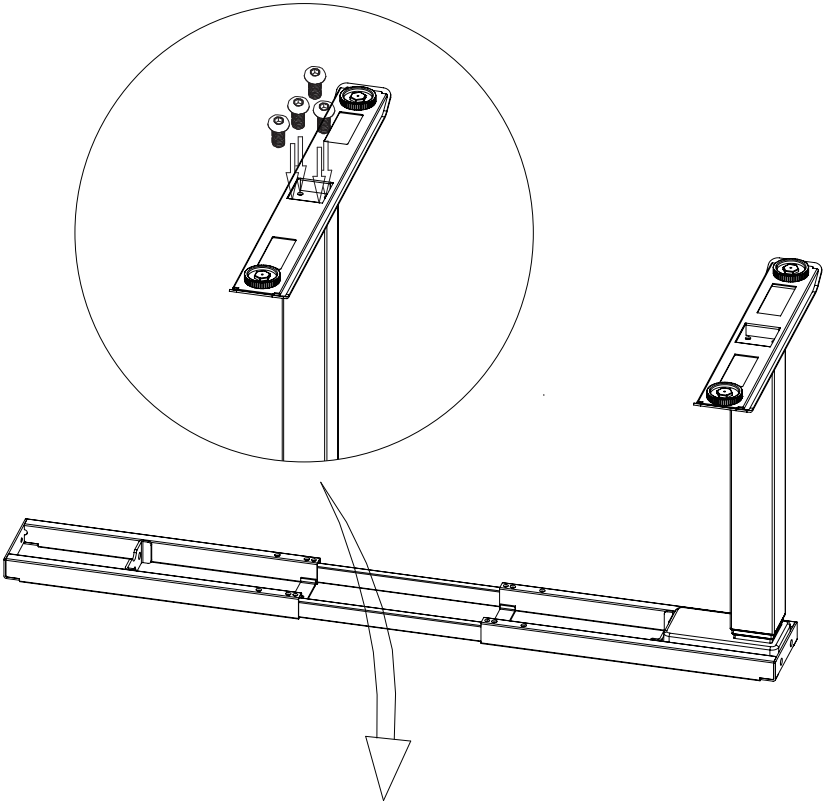

M8*16 SCREW 4PCS

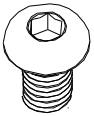

5MM HEX SPANNER

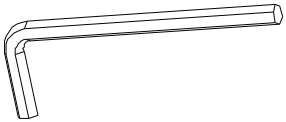

STEP 6

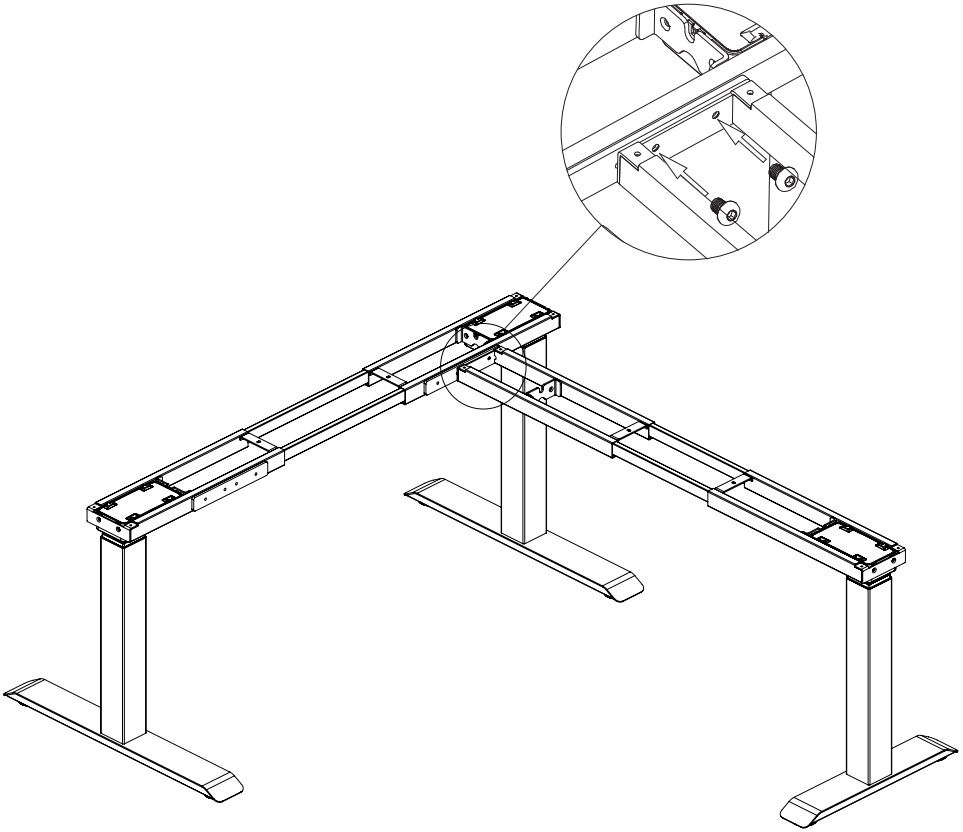

M6*8 SCREW 2PCS

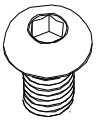

4MM HEX SPANNER

STEP 7

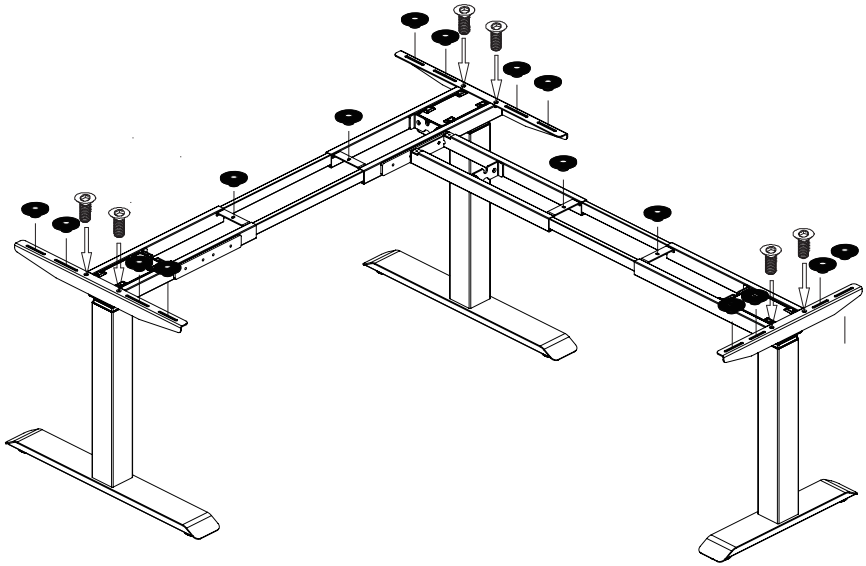

RUBBER CUSHION 16PCS

M6*12 SCREW 6PCS

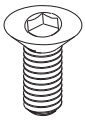

4MM HEX SPANNER

STEP 8

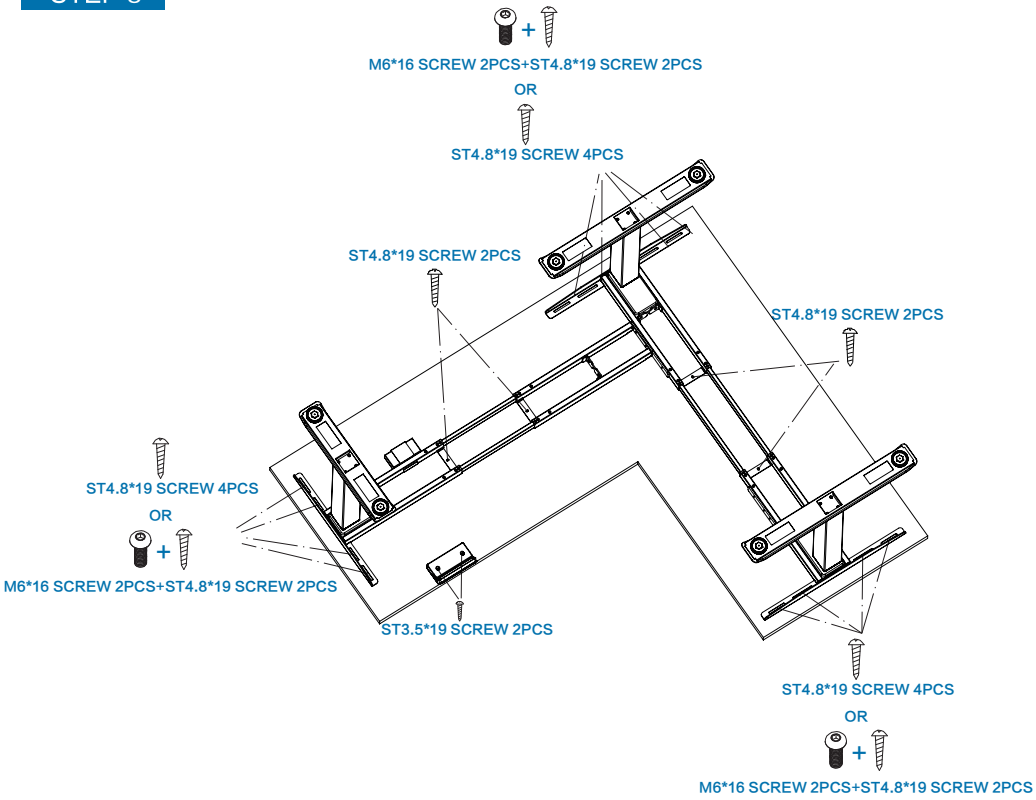

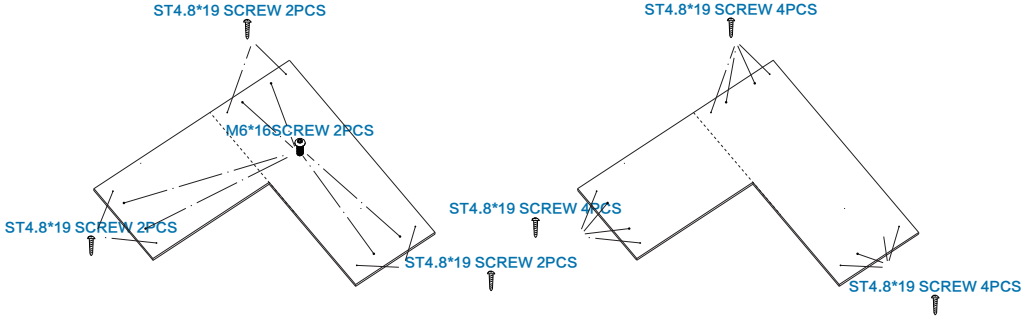

EN: Do not use ST4.8*19 screws for a table top that is thinner than 20 mm
FR: N'utilisez pas les vis ST4.8*19 pour un plateau de table plus mince que 20 mm
NL: Gebruik geen ST4.8*19 schroeven voor een tafelblad dat dunner is dan 20 mm
IT: Non usi ST4.8*19 viti per un piano da tavolo più sottile di 20 mm
ES: No utilice tornillos ST4.8*19 para un tablero de mesa que sea más delgado que 20 mm
DE: Verwenden Sie keine Schrauben ST4.8*19 für eine Tischplatte, die dünner ist als 20 mm
RU: Не используйте ST4.8*19 винтов для столешницы, которая тоньше 20 мм
PL: Nie należy używać ST4.8*19 śrub do blatu, która jest cieńsza 20 mm

STEP 9

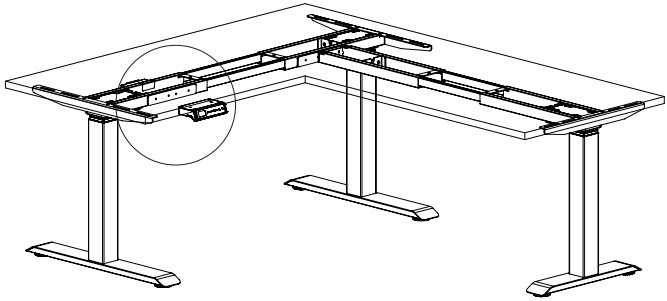

or

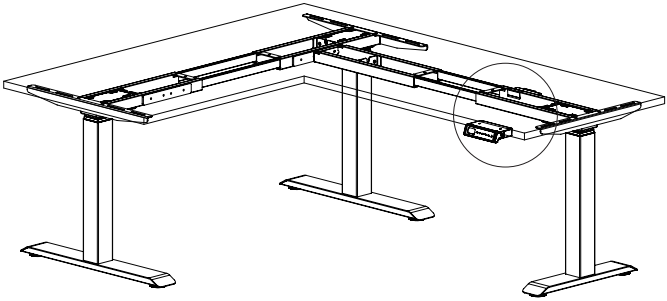

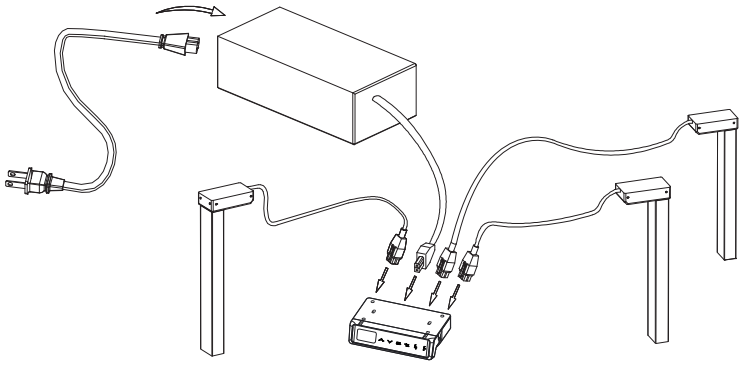

MAX.
150
KG

ST3.5*19 SCREW 5PCS
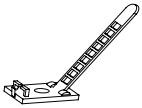
CABLE CLIP